Order No. L2.49000
Tower Combination 49 made of larch

Safety distance
Device dimensions
Functional distance

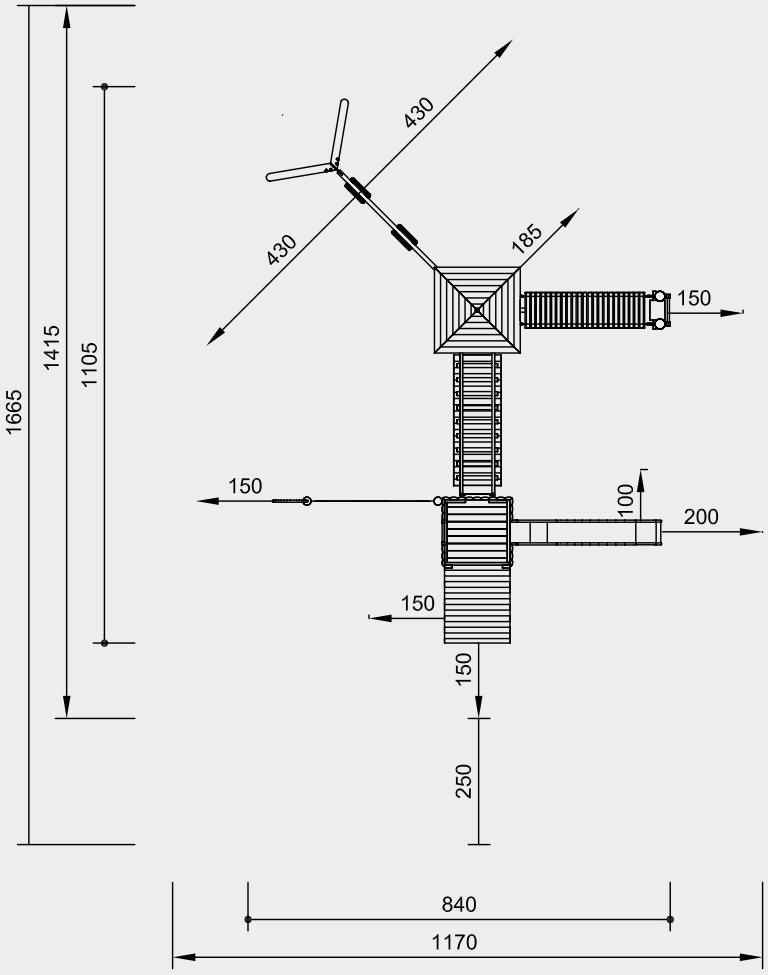

Scale 1:150

Safety check according to DIN EN 1176

Order No. L2.49000
Tower Combination 49 made of larch

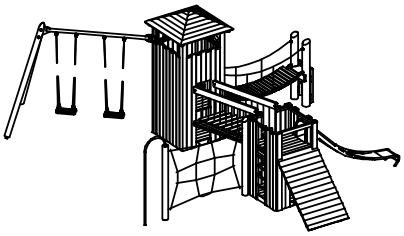

Components	Order No.
1 Square Tower with roof with steel feet	**L3.20600**
1 Support Frame for Suspension Bridge	**3.66005**
1 Running Boards for Suspension Bridge 3.00 m	**3.66090**
1 End Frame with steel feet and ladder	**L3.66030**
1 Square Tower with steel feet	**L3.20500**
2 Support Frames for Chain Path	**3.66240**
1 Walkway for 3.00 m Chain Path	**3.66260**
1 High Twin Swing special with steel feet	**3.19042**
1 Vertical climbing net with firemen's pole	**L6.51600**
1 Inclined wall with steel feet	**3.67514**
1 Stainless Steel Slide	**3.63020**

© Richter Spielgeräte GmbH 05/22